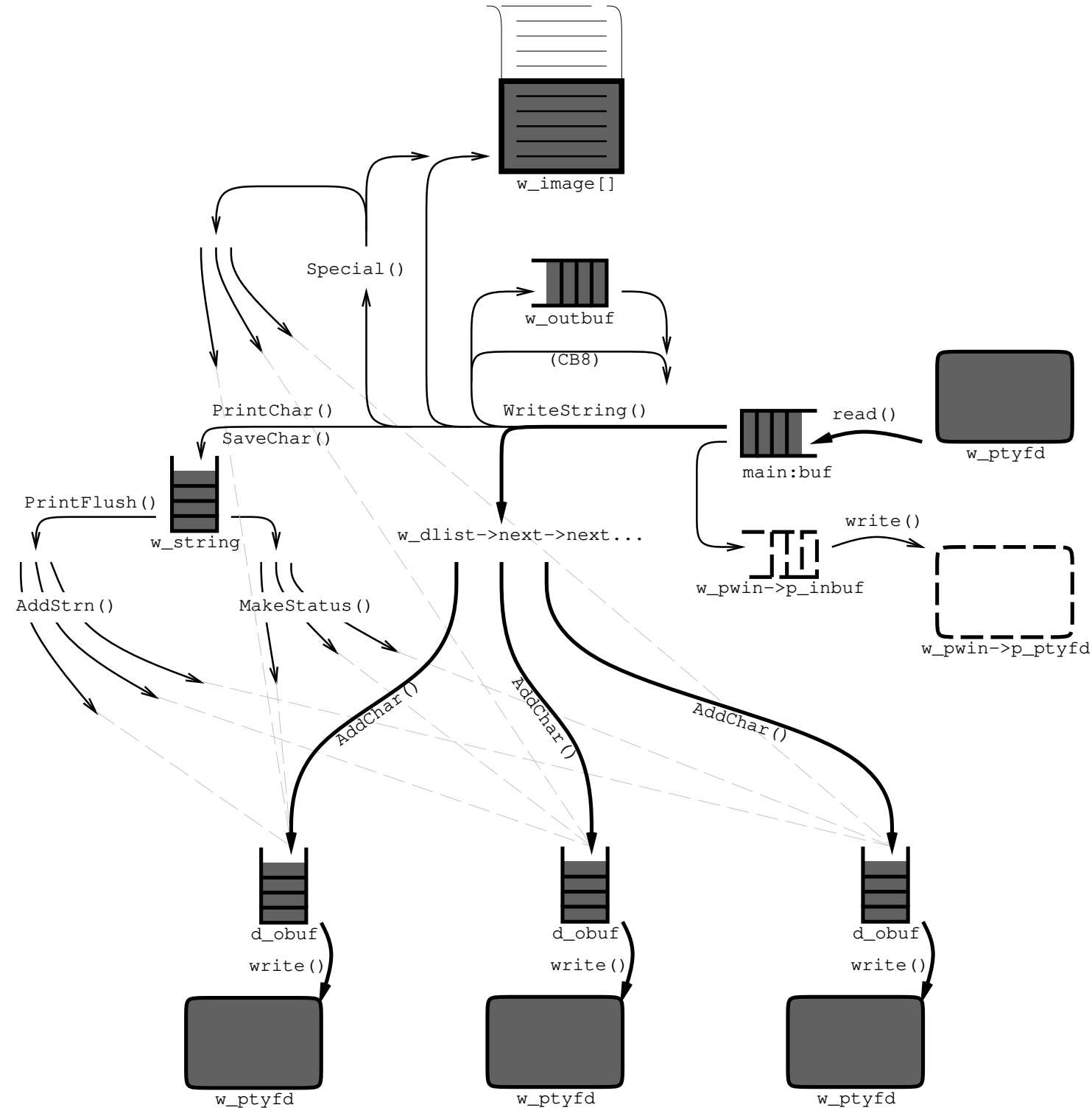Window to display data flow in Screen